Standard Practice for

Evaluation of Precast Concrete Drainage Products

AASHTO Designation: R 73-16[1]
Release: Group 2 (June 2016)

AASHTO

American Association of State Highway and Transportation Officials
444 North Capitol Street N.W., Suite 249
Washington, D.C. 20001

Standard Practice for

Evaluation of Precast Concrete Drainage Products

AASHTO Designation: R 73-16[1] (2020)

Technical Subcommittee: 4a, Concrete Drainage Structures

Release: Group 2 (June)

1. SCOPE

1.1. This standard practice describes the evaluation of precast concrete pipe, box culverts, manholes, and drainage inlets. This standard also describes criteria for acceptable products, repairable products, and the rejection of defective products. All repairs shall conform to the criteria found in this document or to contract documents as applicable.

1.2. This standard practice is applicable to storm water management precast concrete products, manufactured by both the wet cast and dry cast production methods, after curing and prior to installation.

1.3. This standard practice covers the inspection of finished products manufactured per M 86M/M 86, M 170, M 199M/M 199, M 206M/M 206, M 207M/M 207, M 242M/M 242, M 259, and M 273; and ASTM C443, C858, C913, C985, C1417, C1433, C1504, and C1577.

1.4. *Evaluation guidelines are included for the following conditions*:

- cracks,
- manufacturing defects, and
- damaged ends.

1.5. This standard practice is not intended for the evaluation of installed precast concrete pipe, box culverts, three-sided structures, manholes, drainage inlets, or other precast products.

2. REFERENCED DOCUMENTS

2.1. *AASHTO Standards*:

- M 86M/M 86, Nonreinforced Concrete Sewer, Storm Drain, and Culvert Pipe
- M 170, Reinforced Concrete Culvert, Storm Drain, and Sewer Pipe
- M 199M/M 199, Precast Reinforced Concrete Manhole Sections
- M 206M/M 206, Reinforced Concrete Arch Culvert, Storm Drain, and Sewer Pipe
- M 207M/M 207, Reinforced Concrete Elliptical Culvert, Storm Drain, and Sewer Pipe
- M 242M/M 242, Reinforced Concrete D-Load Culvert, Storm Drain, and Sewer Pipe
- M 259, Precast Reinforced Concrete Box Sections for Culverts, Storm Drains, and Sewers
- M 273, Precast Reinforced Concrete Box Sections for Culverts, Storm Drains, and Sewers with Less Than 2 ft of Cover Subjected to Highway Loadings

© 2020 by the American Association of State Highway and Transportation Officials.
All rights reserved. Duplication is a violation of applicable law.

Copyrighted material licensed to Brittany Larson on 2020-10-01 for licensee's use only.
No further reproduction or networking is permitted. Distributed by Clarivate Analytics (US) LLC, www.techstreet.com.

- T 280, Concrete Pipe, Manhole Sections, or Tile

2.2. *ASTM Standards*:

- C443, Standard Specification for Joints for Concrete Pipe and Manholes, Using Rubber Gaskets
- C858, Standard Specification for Underground Precast Concrete Utility Structures
- C913, Standard Specification for Precast Concrete Water and Wastewater Structures
- C985, Standard Specification for Nonreinforced Concrete Specified Strength Culvert, Storm Drain, and Sewer Pipe
- C1417, Standard Specification for Manufacture of Reinforced Concrete Sewer, Storm Drain, and Culvert Pipe for Direct Design
- C1433, Standard Specification for Precast Reinforced Concrete Monolithic Box Sections for Culverts, Storm Drains, and Sewers
- C1504, Standard Specification for Manufacture of Precast Reinforced Concrete Three-Sided Structures for Culverts and Storm Drains
- C1577, Standard Specification for Precast Reinforced Concrete Monolithic Box Sections for Culverts, Storm Drains, and Sewers Designed According to AASHTO LRFD

3. TERMINOLOGY

3.1. *0.01-in. crack*—the crack has reached 0.01 in. in width when the point of the measuring gauge shown in Figure 1 will, without forcing, penetrate $^1/_{16}$ in. at close intervals throughout the 12 in. in length as shown in Figure 2.

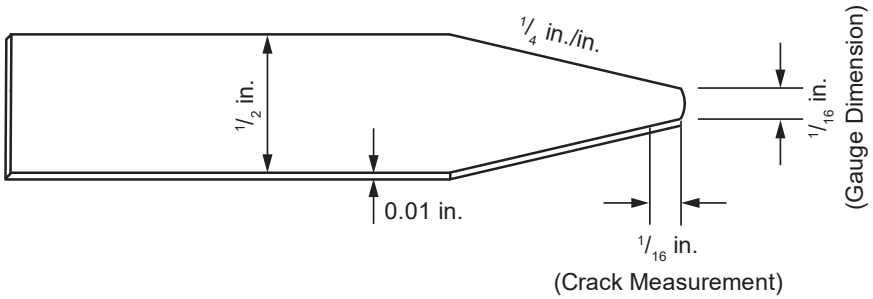

Figure 1—Measuring/Leaf Gauge; Gauge Made from Machinist Leaf of 0.01 in. in Thickness, Ground to a Rounded Point of $^1/_{16}$ in. in width with a taper of $^1/_4$ in./in. (*Courtesy of ACPA*)

© 2020 by the American Association of State Highway and Transportation Officials.
All rights reserved. Duplication is a violation of applicable law.

Copyrighted material licensed to Brittany Larson on 2020-10-01 for licensee's use only.
No further reproduction or networking is permitted. Distributed by Clarivate Analytics (US) LLC, www.techstreet.com.

Figure 2—0.01-in. Crack Measurement
(*Photo Courtesy of ACPA*)

3.2. *bleedout*—leakage of the paste (cement, water, air, and fine aggregate particles) through form gaps and seams of the form that results in small voids or openings between coarse aggregate particles.

3.3. *bug holes*—bug holes are small irregular cosmetic cavities typically resulting from entrapment of air bubbles or water on the surface of formed concrete during placement and consolidation.

3.4. *chip*—physical damage (breakage) of the corner or edges of the product.

3.5. *damage*—physical harm which impairs the product's normal performance.

3.6. *dry cast/packerhead concrete*—a low water-cementitious materials ratio concrete (zero slump) cast by a method in which the product is demolded immediately after consolidating.

3.7. *honeycomb*—failure of mortar to completely surround coarse aggregate in concrete, leaving empty spaces (voids) between the coarse aggregate particles.

3.8. *rifling*—a series of tool marks resembling spiral grooves on the interior of a round structure. These grooves are caused by the manufacturing process and are not typically an indication of insufficient reinforcement cover.

3.9. *sealing surface*—area of the joint which the gasket is capable of sealing.

3.10. *semi-dry cast concrete*—greater than zero slump concrete that is consolidated with or without vibration in which the product is demolded once the concrete stiffens to the point where it can stand on its own.

3.11. *slab off*—a result of separation (delamination) of freshly placed concrete, prior to initial set, which typically occurs at a steel reinforcement plane.

3.12. *spall*—The chipping or splintering of a localized area of cured concrete (usually in a circular or oval shape) breaking loose from the steel reinforcement plane.

3.13. *wet cast concrete*— greater than zero slump concrete that is consolidated with or without vibration in which the product is demolded after reaching a specified stripping and handling strength.

© 2020 by the American Association of State Highway and Transportation Officials.
All rights reserved. Duplication is a violation of applicable law.

Copyrighted material licensed to Brittany Larson on 2020-10-01 for licensee's use only.
No further reproduction or networking is permitted. Distributed by Clarivate Analytics (US) LLC, www.techstreet.com.

4. ACCEPTABLE DEFECTS IN PRECAST CONCRETE PRODUCTS

4.1. Minor defects, which do not affect the performance or design life of the product as described in Sections 4.2 through 4.8, will not be cause for rejection or repair.

4.2. *Acceptable Cracks for Nonreinforced Pipe*:

4.2.1. Fractures or cracks not passing through the wall or joints, or a single end crack less than 2 in. in length at either end of a pipe, unless these defects exist in more than 5 percent of the entire shipment or delivery, shall be acceptable.

4.3. *Acceptable Cracks for Reinforced Pipe*:

4.3.1. A single end crack that does not exceed the depth of the joint as, shown in Figure 3, shall be acceptable.

Figure 3—Acceptable Single End Crack (*Photo Courtesy of ACPA*)

4.3.2. Any continuous crack having a surface width less than 0.01 in. wide, provided it does not pass through the wall as shown in Figure 4, shall be acceptable.

© 2020 by the American Association of State Highway and Transportation Officials.
All rights reserved. Duplication is a violation of applicable law.

Copyrighted material licensed to Brittany Larson on 2020-10-01 for licensee's use only.
No further reproduction or networking is permitted. Distributed by Clarivate Analytics (US) LLC, www.techstreet.com.

Figure 4—Acceptable Surface/Curing Crack (*Photo Courtesy of ACPA*)

4.3.3. Any continuous crack having a surface width of 0.01 in. or greater and less than 12 in. long, provided it does not pass through the wall, shall be acceptable.

4.4. *Acceptable Cracks for Precast Concrete Products Other Than Pipe*:

4.4.1. A single end crack that does not exceed the depth of the joint as shown in Figure 5 shall be acceptable.

4.4.2. Cracks not passing through the wall shall be acceptable.

© 2020 by the American Association of State Highway and Transportation Officials.
All rights reserved. Duplication is a violation of applicable law.

Copyrighted material licensed to Brittany Larson on 2020-10-01 for licensee's use only.
No further reproduction or networking is permitted. Distributed by Clarivate Analytics (US) LLC, www.techstreet.com.

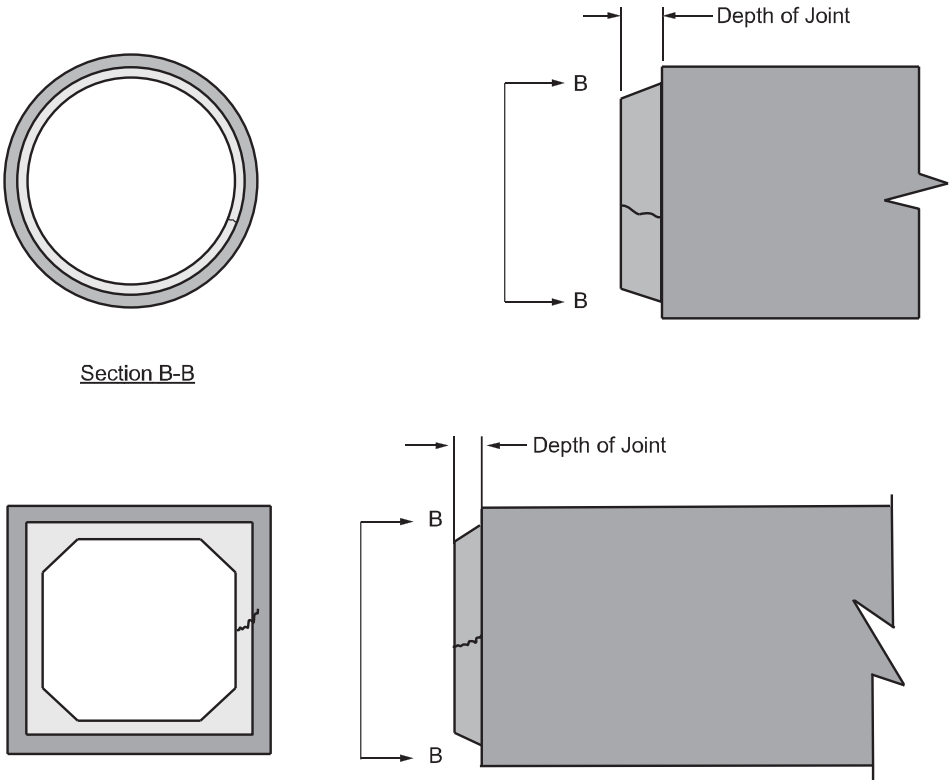

Figure 5—Acceptable Cracks; Single End Crack Does Not Exceed Depth of Joint

4.5. *Acceptable Manufacturing Defects*:

4.5.1. Minor defects that do not affect the strength, durability, or function shall be acceptable. Examples include, but are not limited to: bug holes as shown in Figure 6 or imperfections as shown in Figure 7 inherent in the manufacturing process, or rifling as shown in Figure 8 less than $^{1}/_{4}$ in. in height. Acceptable cosmetic dimensions of bug holes may be determined by the owner. Bug holes more severe than a cosmetic defect shall be subject to criteria in Section 5.3.2.1 and Section 6.4.4.

Figure 6—Acceptable Bug Holes and Shallow Pitting (*Photo Courtesy of ACPA*)

© 2020 by the American Association of State Highway and Transportation Officials.
All rights reserved. Duplication is a violation of applicable law.

Copyrighted material licensed to Brittany Larson on 2020-10-01 for licensee's use only.
No further reproduction or networking is permitted. Distributed by Clarivate Analytics (US) LLC, www.techstreet.com.

Figure 7—Acceptable Lines Caused by Form Jacket during Stripping (*Photo Courtesy of ACPA*)

Figure 8—Acceptable Rifling (*Photo Courtesy of ACPA*)

4.6. *Acceptable Damage and Chips to Ends of Non-Reinforced Pipe*:

4.6.1. A single fracture or spall in the joints not exceeding 3 in. around the circumference of the pipe, nor 2 in. in length into joint, unless these defects exist in more than 5 percent of the entire shipment or delivery, shall be acceptable.

4.7. *Acceptable Damage and Chips to Ends*:

4.7.1. Damage or chips to ends that do not affect the function of the joint as shown in Figure 9 shall be acceptable. This damage can include handling marks, chips, and spalls.

© 2020 by the American Association of State Highway and Transportation Officials.
All rights reserved. Duplication is a violation of applicable law.

Copyrighted material licensed to Brittany Larson on 2020-10-01 for licensee's use only.
No further reproduction or networking is permitted. Distributed by Clarivate Analytics (US) LLC, www.techstreet.com.

Figure 9—Acceptable Chip on Bell End (*Photo Courtesy of ACPA*)

4.8. *Exposed Positioning Devices*:

4.8.1. The exposure of the ends of longitudinals, stirrups, or spacers that have been used to position the cages during the placement of the concrete, as shown in Figures 10 and 11, shall be acceptable.

Figure 10—Acceptable Exposed Longitudinal Reinforcement (*Photo Courtesy of ACPA*)

© 2020 by the American Association of State Highway and Transportation Officials.
All rights reserved. Duplication is a violation of applicable law.

Copyrighted material licensed to Brittany Larson on 2020-10-01 for licensee's use only.
No further reproduction or networking is permitted. Distributed by Clarivate Analytics (US) LLC, www.techstreet.com.

Figure 11—Acceptable Exposed Cage Spacer (*Photo Courtesy of ACPA*)

5. REPAIRABLE DEFECTS IN PRECAST CONCRETE PRODUCTS

5.1. Defects which can affect the function or design life of the precast product that can be adequately repaired to meet specification requirements shall be acceptable for repair as described in Sections 5.2 to 5.4. Any repairs made must be performed such that the structural integrity is not compromised and does not change the dimensional requirements of the product. Repairs made using commercially approved materials must be performed in accordance with the manufacturer's recommendations.

5.2. *Repairable Cracks in Reinforced Products*:

5.2.1. Cracks can be repaired in accordance with Sections 5.2.2 and 5.2.3.

5.2.2. For pipe, cracks 0.01 in. or wider and longer than 12 in. that are not passing through the wall can be repaired with an approved repair material as described in the contract or approved by the owner.

5.2.3. For other products, cracks passing through the wall can be repaired with an approved repair material as described in the contract or approved by the owner.

5.3. *Repairable Uncured Manufacturing Defects*:

5.3.1. Repairs specific to uncured dry cast, packerhead, and semi-dry cast product for slab off areas extending to the reinforcing steel shall commence within 1 h of casting the product by trowel-applying batched concrete from the same mix design, or approved concrete mix into the slab off area.

5.3.2. Repairs of Surface Defects in Cured Products:

5.3.2.1. Honeycombing and bleedout surface conditions less severe than stated in Section 6.4.4, as shown in Figures 12, 13, and 14, are repairable. The repair area of any single defect must be less than 4 percent of the total external surface area. The cumulative repair area must be less than 10 percent of the external surface area in a product.

© 2020 by the American Association of State Highway and Transportation Officials.
All rights reserved. Duplication is a violation of applicable law.

Copyrighted material licensed to Brittany Larson on 2020-10-01 for licensee's use only.
No further reproduction or networking is permitted. Distributed by Clarivate Analytics (US) LLC, www.techstreet.com.

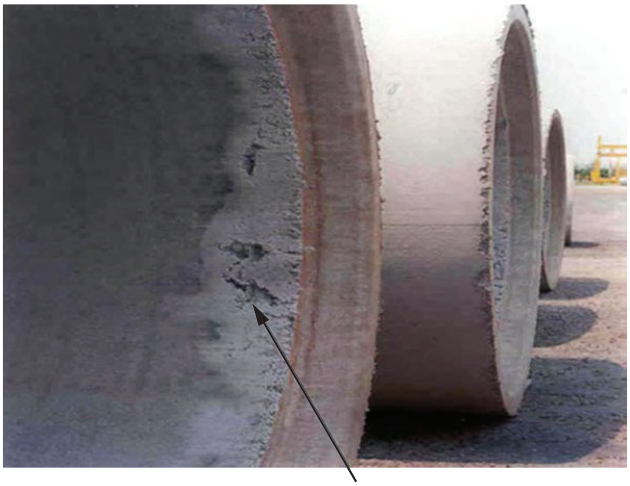

Figure 12—Repairable Honeycombing (*Photo Courtesy of ACPA*)

5.3.2.2. Form bleedout less severe than stated in Section 6.4.4, as shown in Figures 13 and 14, is repairable.

Before After

Figure 13—Acceptable Repair of Form Bleed (*Photos Courtesy of ACPA*)

Figure 14—Repairable Form Bleed on a Box Culvert (*Photo Courtesy of ACPA*)

© 2020 by the American Association of State Highway and Transportation Officials.
All rights reserved. Duplication is a violation of applicable law.

Copyrighted material licensed to Brittany Larson on 2020-10-01 for licensee's use only.
No further reproduction or networking is permitted. Distributed by Clarivate Analytics (US) LLC, www.techstreet.com.

5.3.2.3. For repairs, use plant-mixed or commercial patching material and techniques approved by the contract documents or approved by the owner. Remove all laitance, loose materials, form oil, curing compound, and any deleterious matter from the repair area down to solid concrete.

5.3.3. Repairs of Slab Offs and Spalls in Cured Products:

5.3.3.1. Repair of slab offs and spalls less severe than stated in Section 6.4.5 is permissible. Remove substandard concrete, beyond the reinforcement if the product contains reinforcing to anchor the repair, and eliminate all feathered edges prior to repair as shown in Figure 15. The repair area of any single defect must be less that 4 percent of the total internal surface area. The cumulative repair area must be less than 10 percent of the internal surface area in a product.

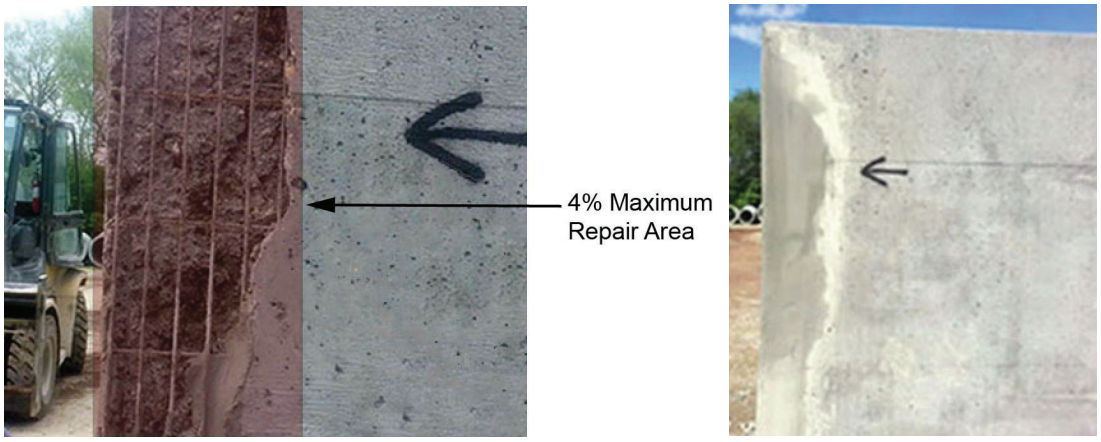

Figure 15—Acceptable Repair of Box Culvert Slab Off (*Photos Courtesy of ACPA*)

5.3.3.2. Spalled areas at lifting holes as shown in Figure 16 (where lifting holes are allowed) that extend to reinforcing steel are acceptable for repair, provided these repairs do not compromise the design or integrity of the lifting hole. Minor spalls at the lifting holes can be repaired at the same time the lifting hole is plugged in the field after installation of the product.

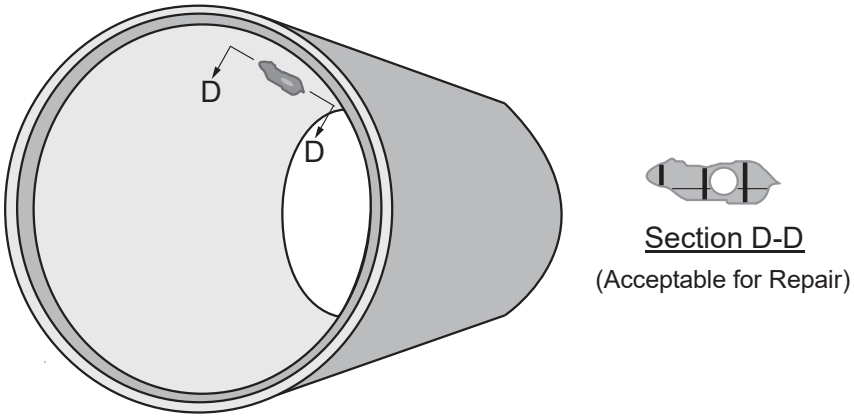

Figure 16—Repairable Damage to Lifting Holes (*Courtesy of ACPA*)

5.3.3.3. For repairs, use a plant-mixed or commercial patching material as described in the contract or approved by the owner. Remove loose concrete materials and laitance prior to repair.

© 2020 by the American Association of State Highway and Transportation Officials.
All rights reserved. Duplication is a violation of applicable law.

Copyrighted material licensed to Brittany Larson on 2020-10-01 for licensee's use only.
No further reproduction or networking is permitted. Distributed by Clarivate Analytics (US) LLC, www.techstreet.com.

Note 1—As an option, concrete from the original mix design or a cementitious repair material using the same cement, fine aggregate, and coarse aggregate (if required due to depth, size of repair or other criteria) which will meet the required concrete mix design strength and which can be placed and finished to required dimensional tolerances may be utilized.

5.4. *Repair of Damaged or Chipped Ends*:

5.4.1. *Repair of Damaged or Chipped Ends for Non-Gasketed Joints*:

5.4.1.1. If the damage or chip is less than 1 in. in depth from the end of the pipe on the bell or spigot, then the total circumference of the structure can be repaired.

5.4.1.2. Damage or chips in round structures 1 in. and greater in depth from the end of the bell or spigot and not exceeding the depth of the joint can be repaired provided the total cumulative damage (L1 + L2 + L3) does not involve more than 50 percent of a round structure's circumference, and no individual damage or chip (L1, L2, or L3) can be more than 25 percent of a round structure's circumference as shown in Figures 17, 18, and 19.

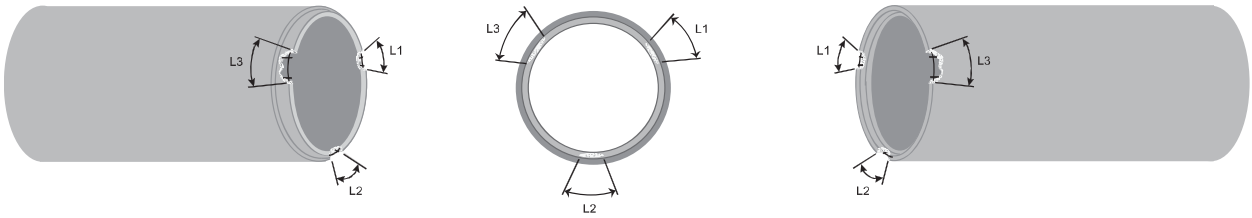

Notes:

1. L1 + L2 + L3 must not exceed 50 percent of the pipe circumference for non-gasketed and gasketed joints respectively.
2. L1, L2, or L3 must not exceed 25 percent of the pipe circumference for non-gasketed and gasketed joints respectively.
3. See Appendix for examples.

Figure 17—Repairable Damage or Chips to Product Ends

Figure 18—Repairable Chip on Bell End (*Photo Courtesy of ACPA*)

© 2020 by the American Association of State Highway and Transportation Officials.
All rights reserved. Duplication is a violation of applicable law.

Copyrighted material licensed to Brittany Larson on 2020-10-01 for licensee's use only.
No further reproduction or networking is permitted. Distributed by Clarivate Analytics (US) LLC, www.techstreet.com.

Figure 19—Repairable Chip on Spigot End (*Photo Courtesy of ACPA*)

5.4.1.3. Damage or chips in rectangular structures 1 in. and greater in depth from the end of the bell or spigot and not exceeding the depth of the joint can be repaired provided the total cumulative damage or chip (L1 + L2 + L3) does not involve more than 50 percent of the structure's span or rise, whichever is greater, and no individual damage or chip (L1, L2, or L3) can be more than 25 percent of a structure's span or rise, whichever is greater as shown in Figures 20 and 21.

Before After

Figure 20—Acceptable Repair of a Box Culvert Joint (*Photos Courtesy of ACPA*)

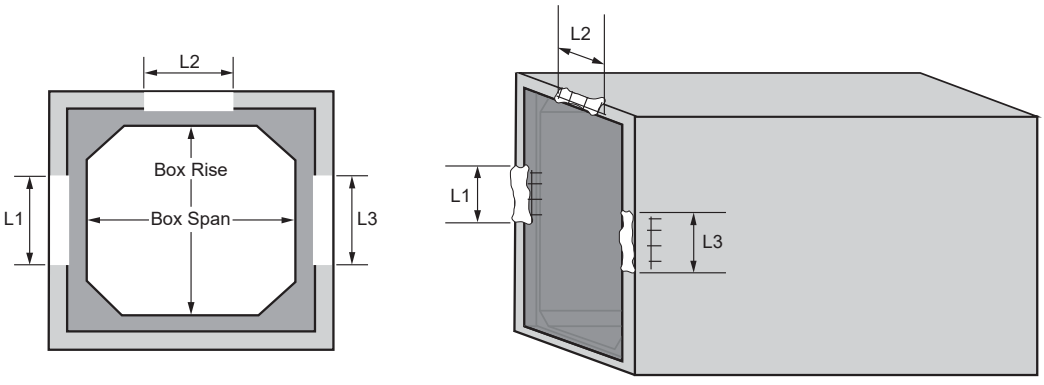

Notes:

1. L1 + L2 + L3 cumulative damage length must not exceed 50 percent of the box span or rise.
2. L1, L2, or L3 (an individual damage length) must not exceed 25 percent of the box span or rise.

Figure 21—Damaged End—Groove End

© 2020 by the American Association of State Highway and Transportation Officials.
All rights reserved. Duplication is a violation of applicable law.

Copyrighted material licensed to Brittany Larson on 2020-10-01 for licensee's use only.
No further reproduction or networking is permitted. Distributed by Clarivate Analytics (US) LLC, www.techstreet.com.

5.4.1.4. For repairs, use plant-mixed or commercial patching material as described in the contract or approved by the owner. Remove substandard concrete, beyond the reinforcement if the bell or spigot contains reinforcing to anchor the repair, and eliminate all feathered edges prior to repair.

5.4.2. Repair of Damaged or Chipped Ends for Gasketed Joints:

5.4.2.1. Damage or chips in gasketed round structures can be repaired provided the repaired sealing surface is free of spalls, cracks, or imperfections that would adversely affect the performance of the joint and the total cumulative damage or chip (L1 + L2 + L3) does not involve more than 50 percent of a round structure's circumference, and no individual damage or chip (L1, L2, or L3) can be more than 25 percent of a round structure's circumference as shown in Figure 17 and Figures 22 through 25.

Figure 22—Repairable Chipped End of Spigot (*Photo Courtesy of ACPA*)

Figure 23—Repairable Chipped End of Spigot (*Photo Courtesy of ACPA*)

© 2020 by the American Association of State Highway and Transportation Officials.
All rights reserved. Duplication is a violation of applicable law.

Copyrighted material licensed to Brittany Larson on 2020-10-01 for licensee's use only.
No further reproduction or networking is permitted. Distributed by Clarivate Analytics (US) LLC, www.techstreet.com.

Figure 24—Acceptable Repair of Chipped Joints (*Photos Courtesy of ACPA*)

Before After

Figure 25—Acceptable Pipe Spigot Repair (*Photos Courtesy of ACPA*)

5.4.2.2. Damage or chips in gasketed rectangular structures can be repaired provided the repaired sealing surface is free of spalls, cracks, or imperfections that would adversely affect the performance of the joint and the total cumulative damage or chip (L1 + L2 + L3) does not involve more than 50 percent of the structure's span and rise, and no individual damage or chip (L1, L2, or L3) can be more than 25 percent of a structure's span or rise as shown in Figures 20 and 21.

5.4.2.3. For repairs, use plant-mixed or commercial patching material as described in the contract or approved by the owner. Remove substandard concrete, beyond the reinforcement if the bell or spigot contains reinforcing to anchor the repair, and eliminate all feathered edges prior to repair.

© 2020 by the American Association of State Highway and Transportation Officials.
All rights reserved. Duplication is a violation of applicable law.

Copyrighted material licensed to Brittany Larson on 2020-10-01 for licensee's use only.
No further reproduction or networking is permitted. Distributed by Clarivate Analytics (US) LLC, www.techstreet.com.

6. REJECTABLE DEFECTS IN PRECAST CONCRETE PRODUCTS

6.1. Defects which will affect the function or design life of the precast product and cannot be adequately repaired in accordance with Section 5 shall be rejected in accordance with Sections 6.2 to 6.6.

6.2. *Rejection of Nonreinforced Pipe Due to Cracks*:

6.2.1. Fractures or cracks passing through the wall or joints except for those cracks in accordance with Section 4.2 is cause for rejection.

6.3. *Causes for Rejection Due to Cracks in Reinforced Products*:

6.3.1. Any crack that visibly passes through the wall of the product, except for a single end crack that does not exceed the depth of the joint, as shown in Figure 26, or not repaired in accordance with Section 5.2 is cause for rejection.

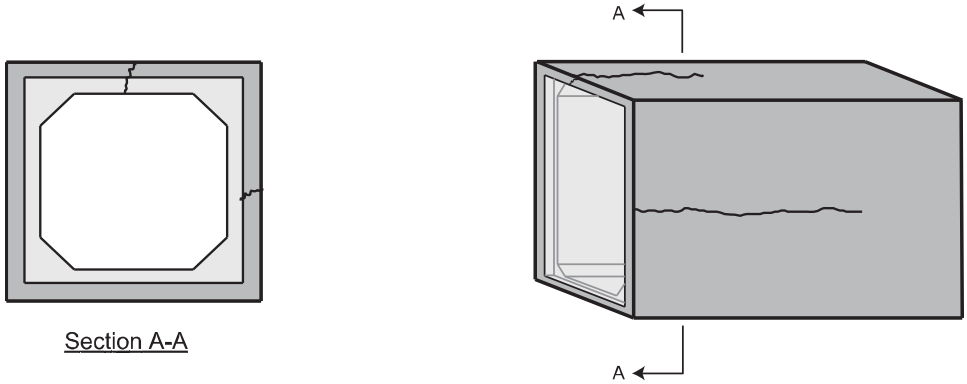

Figure 26—Rejectable Box Culverts with Cracks

6.3.2. Any crack that would prevent making a satisfactory joint is cause for rejection.

6.3.3. For pipe not installed or under load, any continuous crack that is 0.01 in. wide or greater at the surface and 12 in. or longer, regardless of position in the wall of the section when measured in accordance with Section 3.1 and shown in Figures 27 through 29, is cause for rejection.

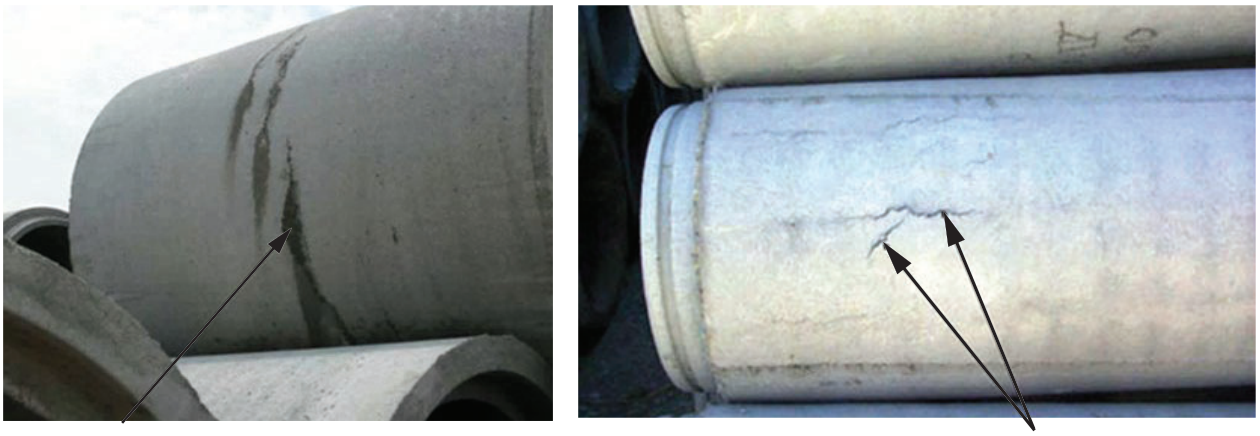

Figure 27—Rejectable Pipes with Cracks Passing through the Wall and Exceeding 0.01 in. in Width and 12 in. in Length (*Photos Courtesy of ACPA*)

© 2020 by the American Association of State Highway and Transportation Officials.
All rights reserved. Duplication is a violation of applicable law.

Copyrighted material licensed to Brittany Larson on 2020-10-01 for licensee's use only.
No further reproduction or networking is permitted. Distributed by Clarivate Analytics (US) LLC, www.techstreet.com.

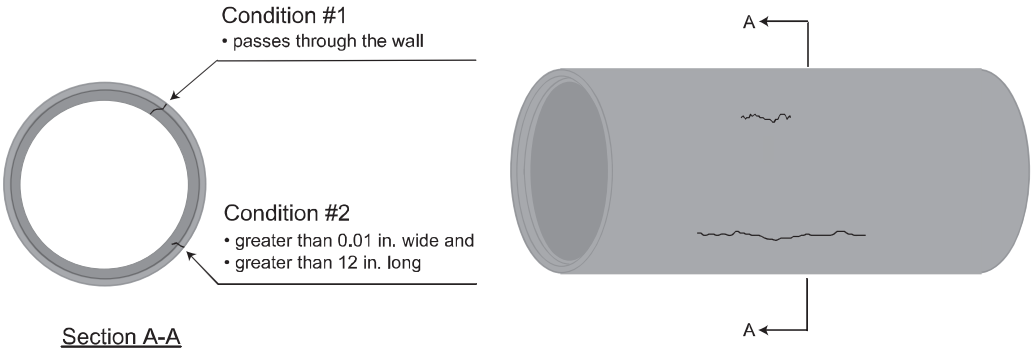

Notes:

1. Condition #1—Any visible crack passing through the wall, regardless of length or width.
2. Condition #2— Crack is at least 0.01 in. wide and at least 12 in. long, even though it does not visibly pass through the wall.

Figure 28—Rejectable Pipe and Manholes with Cracks

Figure 29—Rejectable Pipe with Crack Exceeding 0.01 in. in Width and 12 in. in Length (*Photo Courtesy of ACPA*)

6.4. *Causes for Rejection Due to Manufacturing Defects*:

6.4.1. Offsets in form seams that would prevent adequate concrete cover over reinforcing steel is cause for rejection.

6.4.2. "Rifling" type tool marks $^{1}/_{4}$ in. or greater in height inside the barrel of the pipe, and therefore reducing hydraulic efficiency, is cause for rejection. See Figure 30.

© 2020 by the American Association of State Highway and Transportation Officials.
All rights reserved. Duplication is a violation of applicable law.

Copyrighted material licensed to Brittany Larson on 2020-10-01 for licensee's use only.
No further reproduction or networking is permitted. Distributed by Clarivate Analytics (US) LLC, www.techstreet.com.

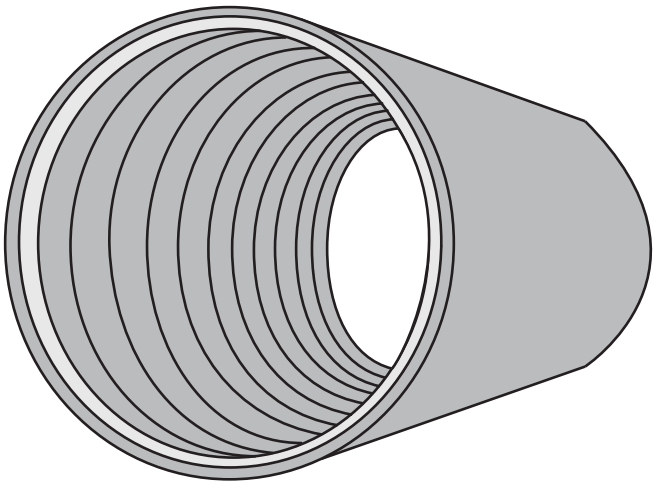

Figure 30—Rejectable Manufacturing Defects—"Rifling" Tool Marks if Marks Are $^{1}/_{4}$ in. or Greater in Height

6.4.3. Evidence of inadequate concrete cover over reinforcing steel, as shown in Figure 31, is cause for rejection.

Figure 31—Rejectable Pipe, Conical Top, and Box Culvert with Exposed Reinforcement (*Photos Courtesy of ACPA*)

© 2020 by the American Association of State Highway and Transportation Officials.
All rights reserved. Duplication is a violation of applicable law.

Copyrighted material licensed to Brittany Larson on 2020-10-01 for licensee's use only.
No further reproduction or networking is permitted. Distributed by Clarivate Analytics (US) LLC, www.techstreet.com.

6.4.4. Honeycomb and Bleedout:

6.4.4.1. Honeycomb or bleedout that extends to a depth greater than the size of the coarse aggregate and exposes reinforcing steel or causes concrete permeability beyond the project specification for leakage, which either occupies a single defect area greater than 4 percent or a cumulative area greater than 10 percent of the internal surface area of the product, as shown in Figure 32, shall not be repairable.

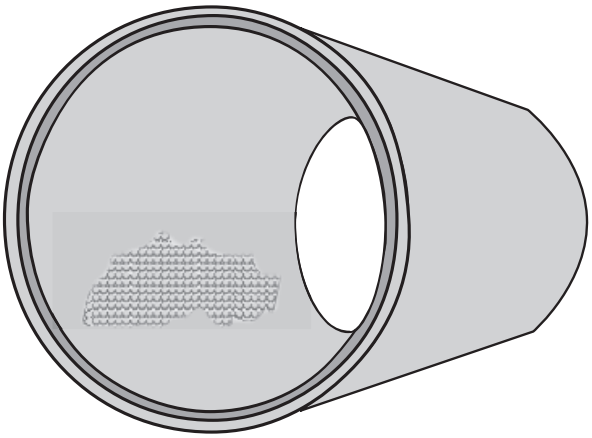

Figure 32—Rejectable Manufacturing Defect—Honeycombing (*Courtesy of ACPA*)

6.4.5. Slab Offs and Spalls on Cured Product:

6.4.5.1. Single slab offs or spalled areas exceeding 4 percent of the external surface area as shown in Figure 33 are cause for rejection.

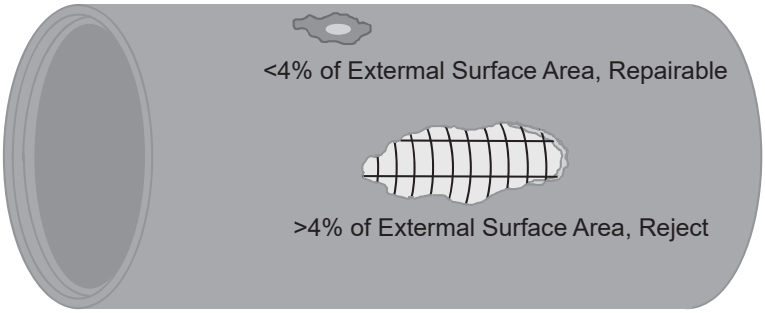

Figure 33—Rejectable and Repairable Manufacturing Defects—Spalls (*Courtesy of ACPA*)

6.4.5.2. Multiple slab off areas exceeding 10 percent of the cumulative external surface area in a product will be cause for rejection.

6.5. *Rejectable Damage and Chips to Ends of Nonreinforced Pipe*:

6.5.1. A single fracture or spall in the joints exceeding 3 in. around the circumference of the pipe or 2 in. in length into joint, or if these defects exist in more than 5 percent of the entire shipment or delivery, will be cause for rejection.

6.6. *Rejectable Damaged and Chipped Ends to Reinforced Products*:

6.6.1. Damage and chips in excess of what is described in Section 5.4 will be cause for rejection.

© 2020 by the American Association of State Highway and Transportation Officials.
All rights reserved. Duplication is a violation of applicable law.

Copyrighted material licensed to Brittany Larson on 2020-10-01 for licensee's use only.
No further reproduction or networking is permitted. Distributed by Clarivate Analytics (US) LLC, www.techstreet.com.

6.6.2. Any unrepaired damage that affects the seal of a gasketed product, as shown in Figure 34, is cause for rejection.

Figure 34—Rejectable Chipped and Damaged Spigot (*Photo Courtesy of ACPA*)

Copyrighted material licensed to Brittany Larson on 2020-10-01 for licensee's use only.
No further reproduction or networking is permitted. Distributed by Clarivate Analytics (US) LLC, www.techstreet.com.

© 2020 by the American Association of State Highway and Transportation Officials.
All rights reserved. Duplication is a violation of applicable law.

APPENDIXES

(Nonmandatory Information)

X1. PERMISSIBLE REPAIR CRITERIA FOR DAMAGED AND CHIPPED ENDS

Table X1.1—Permissible Repair Criteria for Non-Gasketed Joints (End Damage 1 in. and Greater in Depth within the Joint)

Pipe Size (in.) Designation	Permissible Cumulative Damage Length (in.) (50% Circumference Maximum)	Permissible Individual Damage Length (in.) (25% Circumference Maximum)
12	$18^1/_2$	9
15	$23^1/_2$	$11^3/_4$
18	$28^1/_4$	14
24	$37^3/_4$	19
27	$42^1/_4$	$21^1/_4$
30	47	$23^1/_2$
36	$56^1/_2$	$28^1/_4$
42	66	33
48	$75^1/_4$	$37^1/_2$
54	$84^3/_4$	$42^1/_2$
60	$94^1/_4$	47
72	113	$56^1/_2$
84	132	66
96	$150^3/_4$	$75^1/_2$
108	$169^1/_2$	$84^3/_4$
120	$188^1/_2$	$94^1/_4$
144	$226^1/_4$	113

Notes:

1. L1 + L2 + L3 must not exceed 50 percent of the pipe circumference. See example.
2. L1, L2, or L3 must not exceed 25 percent of the pipe circumference. See example.
3. Pipe Circumference = $2\pi r$, where r = pipe radius = pipe diameter/2; therefore, Pipe Circumference = πd, where d = pipe diameter. See example.

Example:

To determine the circumference of a 24-in. pipe, multiply the pipe diameter by π:

(π = 3.1416), Circumference = 24 in. × 3.1416 = 75.4 in.

Determine 50 percent of the pipe circumference:

75.4 in. × 0.50 = 37.7 in. ($37^3/_4$ in.) – permissible cumulative damage length (L1 + L2 + L3)

Determine 25 percent of the pipe circumference:

75.4 in. × 0.25 = 18.85 in. (19 in.) – permissible individual damage length (L1, L2, or L3)

© 2020 by the American Association of State Highway and Transportation Officials.
All rights reserved. Duplication is a violation of applicable law.

Copyrighted material licensed to Brittany Larson on 2020-10-01 for licensee's use only.
No further reproduction or networking is permitted. Distributed by Clarivate Analytics (US) LLC, www.techstreet.com.

Table X1.2—Permissible Repair Criteria for Gasketed Joints (ASTM C443, Repair Section)

Pipe Size (in.) Designation	Permissible Cumulative Damage Length (in.) (50% Diameter Maximum)	Permissible Individual Damage Length (in.) (25% Diameter Maximum)
12	6	3
15	$7^1/_2$	$3^3/_4$
18	9	$4^1/_2$
24	12	6
27	$13^1/_2$	$6^3/_4$
30	15	$7^1/_2$
36	18	9
42	21	$10^1/_2$
48	24	12
54	27	$13^1/_2$
60	30	15
72	36	18
84	42	21
96	48	24
108	54	27
120	60	30
144	72	36

Notes:
1. L1 + L2 + L3 must not exceed 50 percent of the pipe diameter. See example.
2. L1, L2, or L3 must not exceed 25 percent of the pipe diameter. See example.

Example:

50 percent of the diameter of a 24-in. pipe:

24 in. × 0.50 = 12 in. – permissible cumulative damage length (L1 + L2 + L3)

25 percent of the diameter of a 24-in. pipe:

24 in. × 0.25 = 6 in. – permissible individual damage length (L1, L2, or L3)

© 2020 by the American Association of State Highway and Transportation Officials.
All rights reserved. Duplication is a violation of applicable law.

Copyrighted material licensed to Brittany Larson on 2020-10-01 for licensee's use only.
No further reproduction or networking is permitted. Distributed by Clarivate Analytics (US) LLC, www.techstreet.com.

X2. PERMISSIBLE REPAIR CRITERIA FOR SLAB OFFS AND SPALLS ON CURED PRODUCT

Table X2.1—Permissible Repair Criteria for Reinforced Round Products

Pipe/Manhole Size (in.) Designation	Repairable Cumulative Damage Area (ft^2) (10% External Surface Area)	Repairable Individual Damage Area (ft^2) (4% External Surface Area)
12	3.3	1.3
15	4.1	1.6
18	4.8	1.9
24	6.3	2.5
27	7.0	2.8
30	7.7	3.1
36	9.2	3.7
42	10.7	4.3
48	12.1	4.9
54	13.6	5.4
60	15.1	6.0
72	18.0	7.2
84	20.9	8.4
96	23.9	9.5
108	26.8	10.7
120	29.7	11.9
144	35.6	14.2

Notes:

1. Calculations above assume 8-ft long sections of pipe. See example.
2. Calculations above assume a B Wall Pipe. See example.

Example:

To determine the external surface area of a 24-in. pipe, multiply the pipe diameter, plus wall thicknesses, and length of the pipe by π:

(π = 3.1416), Surface area = 3.14 × (Dia + 2 * Wall)/12 × Length = 3.14(24 + 2(24/12 + 1))/12 × 8 = 63 ft^2.

Determine 10 percent of the pipe surface area:

63 ft^2 × 0.10 = 6.3 ft^2 – permissible cumulative damage area (spall/slab off 1 + spall/slab off 2 + spall/slab off 3)

Determine 4 percent of the pipe surface area:

63 ft^2 × 0.04 = 2.5 ft^2 – permissible individual damage area (spall/slab off 1, spall/slab off 2, or spall/slab off 3)

© 2020 by the American Association of State Highway and Transportation Officials.
All rights reserved. Duplication is a violation of applicable law.

Copyrighted material licensed to Brittany Larson on 2020-10-01 for licensee's use only.
No further reproduction or networking is permitted. Distributed by Clarivate Analytics (US) LLC, www.techstreet.com.

Table X2.2—Permissible Repair Criteria for Reinforced Rectangular Structures

Box Size (ft × ft) Designation	Repairable Cumulative Damage Area (ft^2) (10% External Surface Area)	Repairable Individual Damage Area (ft^2) (4% External Surface Area)
3 × 3	11.7	4.7
4 × 4	15.5	6.2
5 × 5	19.2	7.7
6 × 6	22.9	9.2
7 × 7	26.7	10.7
8 × 8	29.9	11.9
9 × 9	33.6	13.4
10 × 10	37.3	14.9
11 × 11	41.1	16.4
12 × 12	44.8	17.9

Notes:
1. Calculations above assume 8-ft long sections of box. See example.
2. Calculations above assume wall thicknesses according to ASTM C1577. See example.

Example:

To determine the external surface area of a 4 by 4 box culvert, multiply each wall rise and span, plus wall thicknesses, by the length of the section:

Surface area = 2 (Rise + 2*Wall) × Length + 2(Span + 2*Wall) × Length = 2(4 + 2*5/12) × 8 + 2(4 + 2*5/12) × 8 = 155 ft^2.

Determine 10 percent of the rectangular surface area:

155 ft^2 × 0.10 = 15.5 ft^2 – permissible cumulative damage area (spall/slab off 1 + spall/slab off 2 + spall/slab off 3)

Determine 4 percent of the rectangular surface area:

155 ft^2 × 0.04 = 6.2 ft^2 – permissible individual damage area (spall/slab off 1, spall/slab off 2, or spall/slab off 3)

[1] This full standard was first published in 2016.

© 2020 by the American Association of State Highway and Transportation Officials.
All rights reserved. Duplication is a violation of applicable law.

Copyrighted material licensed to Brittany Larson on 2020-10-01 for licensee's use only.
No further reproduction or networking is permitted. Distributed by Clarivate Analytics (US) LLC, www.techstreet.com.